Estlcam LPT / Parallel Port Adapter

USB and Power:

USB / serial IC: FT230XS
If replaced by different IC: Device must be able to support 1MBaud serial communication speed

Polyfuse 350mA as short circuit protection recommended

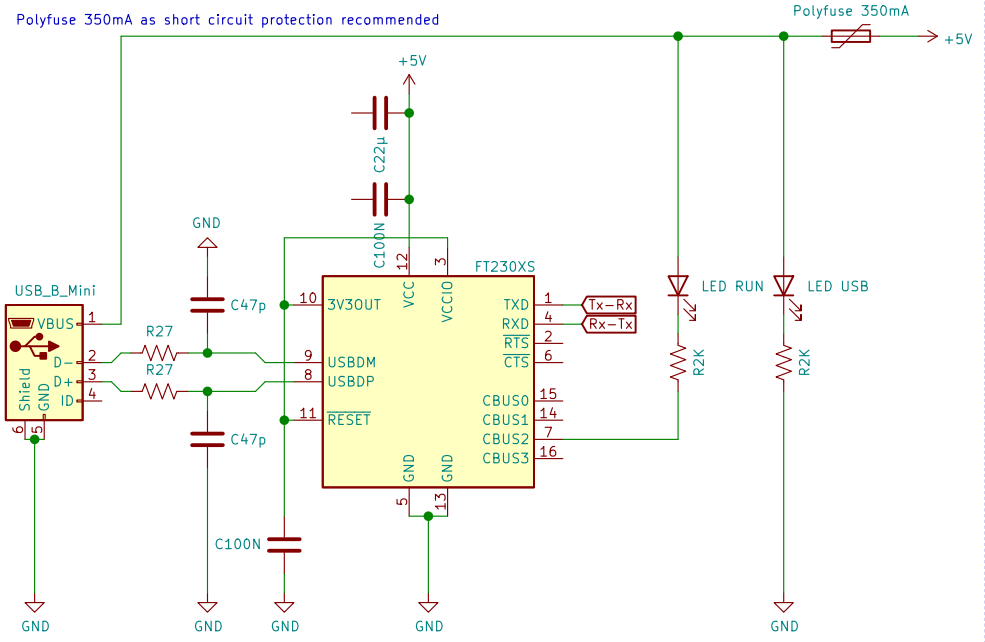

Mini−DIN connector for CNC pendant or control panel

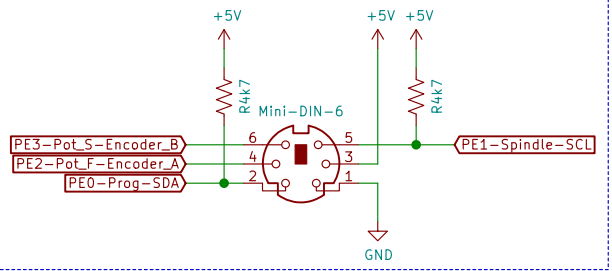

Processor: Atmega328PB ("PB" NOT ...328"P")
Frequency: 16MHz +−0.5%
Inputs pulled up by 4k7 Resistors to +5V

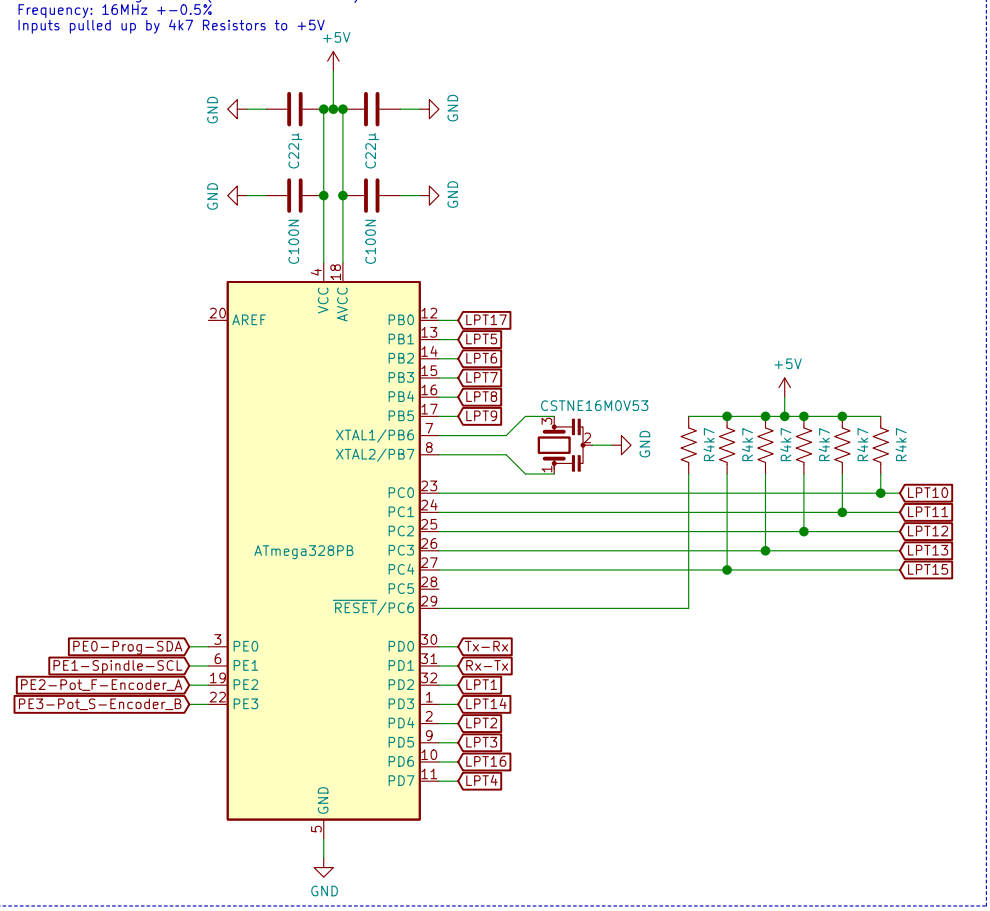

DB25 female LPT port connector

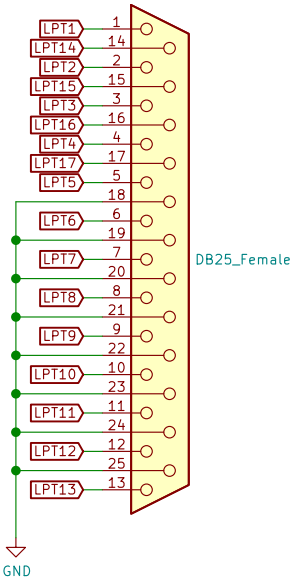

All information is subject to change!
Use at your own risk!