Estlcam Terminal Adapter

USB and Power:

USB / serial IC: FT230XS
If replaced by different IC: Device must be able to support 1MBaud serial communication speed

Polyfuse 350mA as short circuit protection recommended

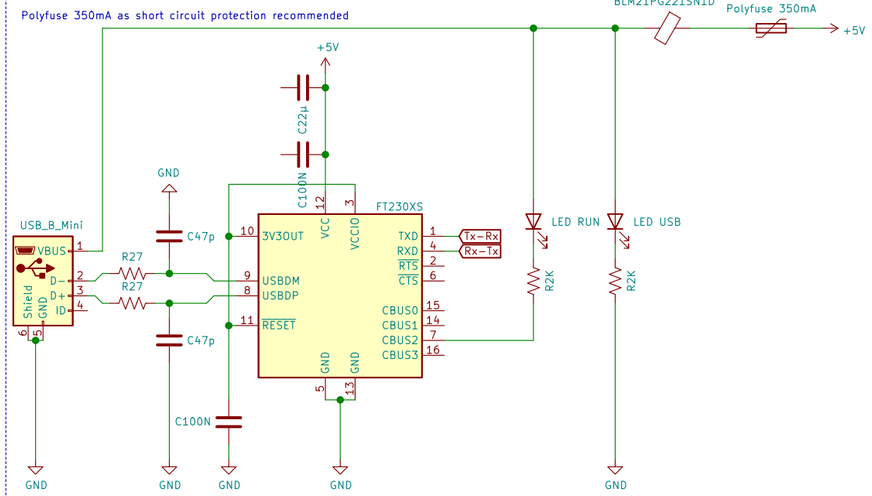

Mini-DIN connector for CNC pendant or control panel

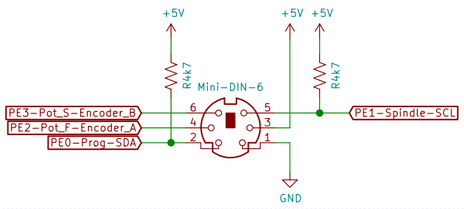

Step / Dir Terminals
"COM" should by default be connected to "GND" by a 0 Ohm resistor or jumper.
Allow for optional connection to "+5V" by empty 0 Ohm resistor field or jumper

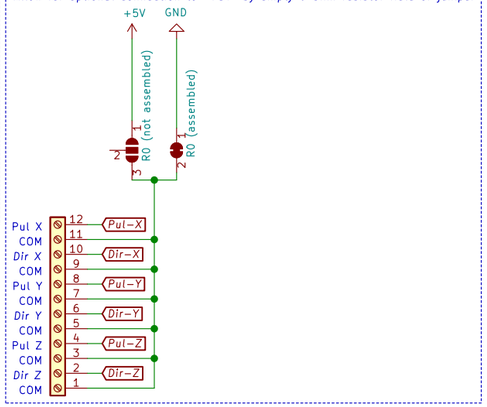

Inputs
Schematic shows one of 8 inputs.
"V+" Terminals = Sensor power supply
"E1" to "E8" = actual inputs
Inputs are switching against "GND"
(Suitable for NPN Sensors and mechanical switches)

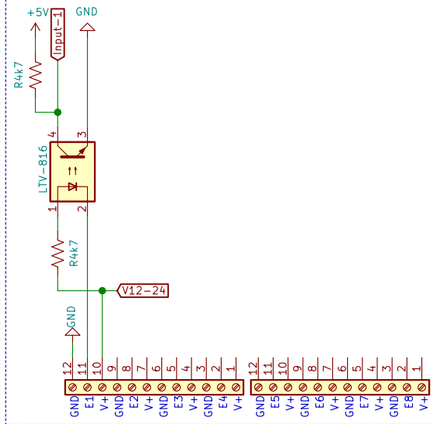

Processor: Atmega328PB ("PB" NOT ...328"P")
Frequency: 16MHz +-0.5%
Disable Reset pin by programming RSTDisbl fuse so it can be used as output for Relay 3.
In circuit programming may only be possible by adding an external pull-up to the reset line.

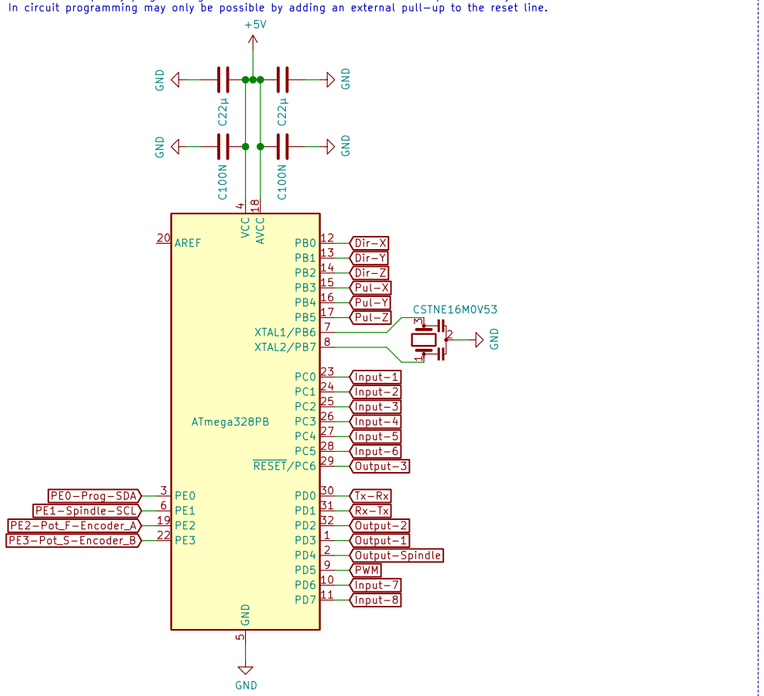

Power supply and overview of screw terminal arrangement
10A diode for input reverse voltage protection
(Overkill but otherwise accidential short circuits would result in need for repair)

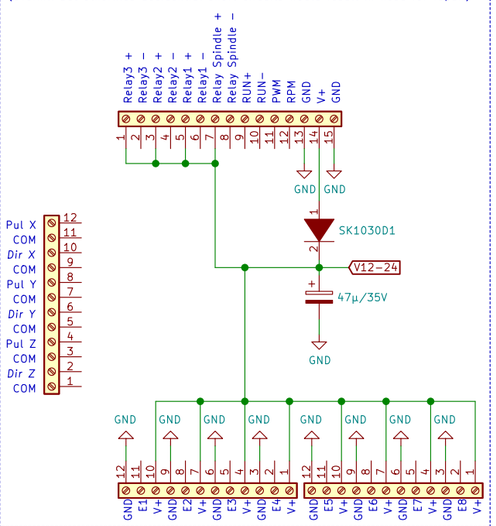

0-10V analog RPM and digital PWM output

This PWM to 0-10V converter provides a stable output even if the boards +5V voltage fluctuates (it will!).
The PWM signal is first sent to a buffer powered by a separate 5V power regulator to eleminate voltage fluctuations.
After this the stabilized PWM signal is fed to a traditional RC filter and non-inverting amplifier.

Connect the other amplifier of the LM358 as voltage follower.
Pull down resistor on PWM signal recommended.
LM358 1k output protection may cause linearity issues on low impedance devices
but avoids damage to the board in case of short circuits.

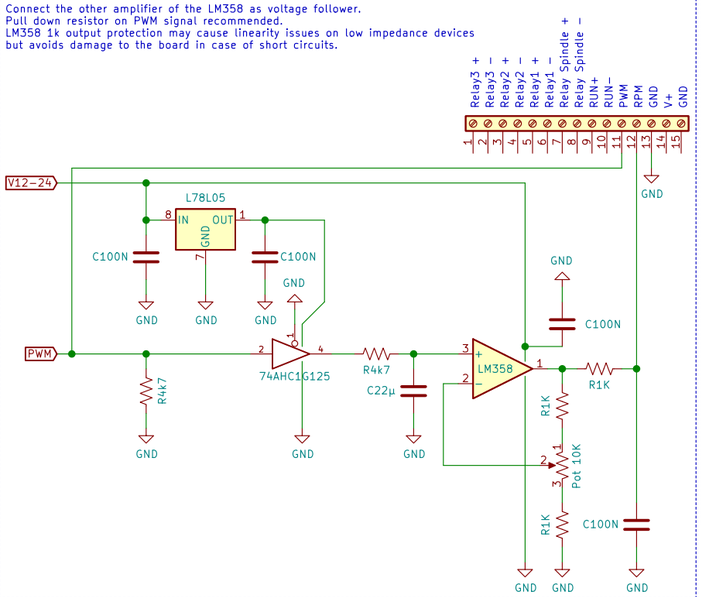

Relay and RUN outputs
PPTC Fuse 200mA for each relay output recommended
(ULN2003 tends to destroy ATmega328PB and FT230 in case of unprotected short circuits)

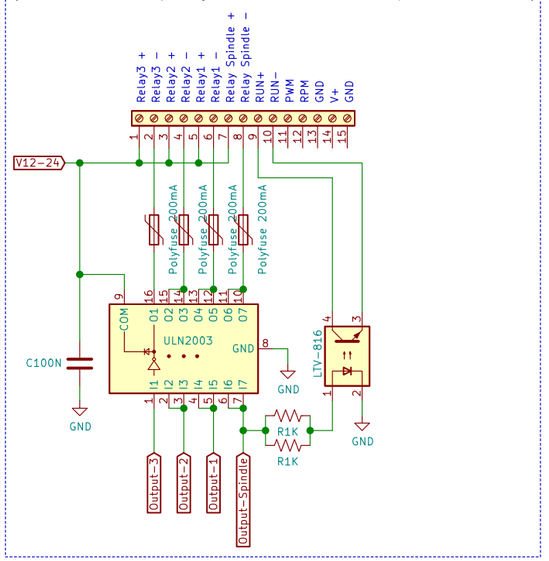

All information is subject to change!
Use at your own risk!